Installer Instruction Manual for:

Vacuum Tube Heat Pipe Solar Collector from Tec-Solar Type TS-20-58PA

This collector has been tested to BS EN 12975 parts 1 and 2 at the Fraunhofer Institute for Solar Energy Systems.
It has been awarded the European Quality Standard SOLAR KEYMARK by the German Certification Body DIN CERTCO.

Registration No. 011-7S261 R
Inspect the register at :
http://www.solarkeymark.dk/CollectorCertificates

Applications of vacuum tube collectors include the heating of water in domestic and commercial buildings and indoor and outdoor swimming pools.

This product has been manufactured to the very highest standards. Provided that it has been correctly handled and installed, it should give you many years of service with only the minimum of maintenance.

To install this collector correctly, knowledge of solar systems and basic plumbing and electrical skills are required. Should you feel unqualified to perform this work then it is strongly recommended that you refer to an accredited solar technician.

A database of accredited UK installers can be found at:
http://www.microgenerationcertification.org/about-us/mcs-equivalence

Please read this manual carefully before beginning assembly and installation. Damage to the collector caused by incorrect handling, assembly or fitting may invalidate the warranty.

TS-20-58PA Technical Data

Mechanical Data:

Overall Dimensions
Width = 1.75 m, Height = 2.00 m, Depth = 0.15 m
Gross Area = 3.50 m^2, Aperture Area = 1.89 m^2, Absorber Area = 1.61 m^2
Maximum Recommended Wind Load = 108 km/h (30 m/s)
Tubes Resistant to Hailstones ≤ 25 mm in diameter
Recommended angle of tilt = 20° - 90° from horizontal
Weight Empty = 76 kg

Hydraulic Data:

Maximum Operating Pressure = 6 bar
Recommended Operating Pressure (for closed loop systems) = 2.0 – 3.0 bar
Manifold Fluid Volume = 1.21 litres
Recommended Flow Rate = 2.0 – 3.0 litres / min
Pressure Drop at Flow Rate 3.0 l / min ≤ 20 mbar
Heat Transfer Fluid (for closed loop systems) = propylene glycol / pure water mixture
Hydraulic Connections – 22 mm Copper Pipes

Thermal Data:

Maximum Recommended Operating Temperature = 125 °C
Stagnation Temperature at 1000 W/m^2 irradiation and 30 °C ambient = 204 °C
Effective Thermal Capacity of Collector = 14.6 kJ/ °C m^2

Materials Used:

Manifold Cover and Frame – Aluminium Alloy
Header Pipe Insulation – Rock Wool
Header Pipe – Copper
Absorber –Ceramic /Graded Cermet/ Metal (AlN/AlN-SS/Cu) on Glass
Vacuum Tubes – Borosilicate Glass 3.3 (1.65mm)
Tube / Manifold Seals - Silicone Rubber (UV Stabilised)
Tube Cups – Nylon Composite (UV Stabilised)

Performance Data :

The collector output power P may be expressed in terms of the following parameters: Global Irradiance G, (Fluid – Ambient) Temperature Difference Δθ, Efficiency Without Losses η_0, Linear Heat Loss Coefficient k_1, Quadratic Heat Loss Coefficient k_2 and Aperture Area a.

Assuming radiation at normal incidence it may be calculated by the empirical equation:

$$P = (G * \eta_0 - k_1 * \Delta\theta - k_2 * \Delta\theta^2) * a.$$

As measured by ISE; $\eta_0 = 0.659$, $k_1 = 1.442$ W/m^2K, $k_2 = 0.0128$ W/m^2K^2 and a = 1.89 m^2.

Thus the calculated Power Output when G = 700 W/m^2 is:

Δθ = 10 K, P = <u>842</u> W Δθ = 20 K, P = <u>808</u> W Δθ = 40 K, P = <u>724</u> W

Storing, Handling and Transporting of the Collector

Storing and Handling

The collectors are supplied in export cartons. They should be stored on a flat level surface and the base supported along its entire length. They should not be stacked more than 5 high and preferably lifted only by two persons.

The glass tubes are very strong but they should be handled with care. Like all glass objects they can undergo brittle fracture and produce very sharp shards. None of the cartons should ever be allowed to drop to the floor.

<u>Use gloves, eye protection and appropriate clothing.</u> It is advisable to unpack the tubes one at a time and only when they are about to be installed into the already assembled, mounted, plumbed in, and charged system.

The contents of the cartons are:

2 cartons, each of mass = 30 kg and each containing 10 x 58 mm Vacuum Tubes.

1 carton of mass = 17 kg and containing the Manifold, Frame and Accessories.

Transporting

These products should be transported at all times with extreme caution. If transported by road the cartons should be secured in the vehicle, preferably by the use of a pallet.
For air, sea or rail transport it is advisable to pack the cartons inside a wooden crate.

Structural Safety and Building Regulations

This collector is suitable for mounting directly onto a sloping roof of tile, slate etc. With the use of a stand, it may also be installed on a flat roof.

The roof must not only carry the additional weight of the collector but also possible increased wind and snow loads.

<u>Before beginning work it is of vital importance to ensure that the roof surface and substructures have sufficient load bearing capacity.</u>

Particular attention should be paid to the quality of any timber substructures to which the collector will be screwed or bolted. It should be installed with strong and rigid fixings to a solid structure.

For roofs of all types, that are in good condition and satisfy local building regulations, there should not be a problem.

<u>If you are I any doubt about the suitability of the roof then you are strongly urged to seek the advice of a qualified builder or accredited solar technician.</u>

The maximum recommended continuous wind load is 30 m/s, but the site assessment should consider particular features that may lead to increased transient loads, for example by eddy formation.

On sloping roofs the collector will naturally tend to shed snow and usually not lead to increased loads. On flat roofs, care should be taken, especially with arrays, to ensure that the collector positioning does not lead to excessive snow piles. This situation can produce dangerously high loads that may lead to roof collapse.

In all cases there should be a distance of at least 1m between collectors and roof ridges or edges.

Before beginning work you are advised to check for compatibility of the installation with the local building and planning regulations. For domestic installations in the UK, planning permission will not normally be required.

Lightning Protection

For single collectors or small arrays it is not normally necessary to connect any lightning protection system.

If a fixing is to be made to any metal substructures, then it is advisable to consult an appropriate qualified specialist.

If required, it is possible to connect the collector to a grounding line laid outside of the building, following the locally applicable regulations.

You may also consider passing the manifold temperature sensor leads through an appropriate connection box fitted with protection diodes in order to protect the controller against lightning induced high voltages.

Collector Inclination and Orientation

In the UK the optimum inclination is approximately 40 degrees to the horizontal. South facing is preferred, but any orientation from south-east to south-west makes little difference to the performance.

The heat pipes will operate correctly for inclinations of 20 degrees (min.) - 90 degrees (max.) to the horizontal.

Collectors may also be mounted in pairs on East-West facing roofs. In this case nearly twice the total collector area will then be required for a given output power.

The usual method of mounting is to connect them in series, with the flow (and sensor) from the East side and the cold return (and pump) to the West side.

Assembly of the Collector Manifold and Frame

a) **Place the two frame uprights on a flat and level surface at the correct spacing (1440 mm between centres), as shown in Fig. 1 below.**

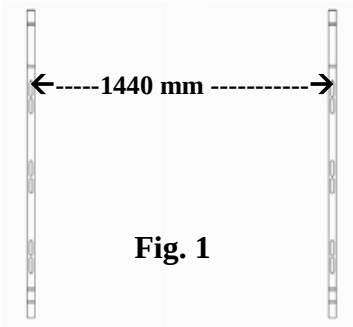

Fig. 1

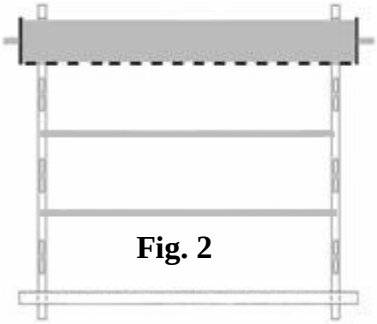

Fig. 2

b) **Attach the manifold horizontally across the top, using the clips and bolts provided, as shown in Fig. 2 above and Fig. 3 below. Secure the nuts only hand tight initially.**

a)

Fig. 3

b)

c) **Attach the lower tube track (Tail Stock) to the uprights, using the clips and bolts provided, as shown in Fig. 2 and also Fig. 4 below.**

Fig. 4

Fig. 5

d) **Fit the narrower horizontal supports between the uprights, as shown in Fig. 2 above.**

e) **Ensure that the whole assembly is square (using, for example, the edge of a rug) before final tightening of the nuts.**

(The vacuum tubes fit into the composite nylon cups on the lower tube rack, as in Fig. 5 above. They should be inserted only after the collector has been mounted and the solar loop plumbed in and charged.)

f) **The use of carrying straps is recommended for lifting the collector onto the roof. Avoid impacts or lifting the collector using the hydraulic connections.**

Mounting the Collector on a Sloping Roof

Select a suitable un-shaded roof position and after due consideration of the suitability of the roof structure and of the relevant safety requirements for working at heights, mark out the 4 fixing points on the roof where the collector is to be mounted.

Various methods can be used to attach the collector to the roof:

a) Rigid Roof Fixing Brackets screwed directly into the rafters or additional pieces of roofing batten fixed between the rafters. These brackets exit from between two tile layers and give a rise of 50mm or more to the collector frame. They require the removal of two or three slate/tile layers above the bracket position. They can be used on most types of flat, ridged or interlocking tiles.

b) As in a) above, but using flexible stainless straps. These can be used on flat tile/slate roofs, but they are not recommended in high wind areas on roofs of ridged or interlocking tiles, where excessive vibration may occur which could damage the tubes.

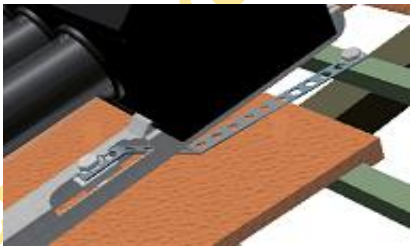

c) Roof Bolts (Coach Bolts or Hanger Bolts) screwed directly into the rafters or suitable timbers braced between the rafters from inside the roof space. The hole is sealed around with silicone sealant and then a rubber or bitumen washer held in place by a locking nut. On a ridged tile roof a length of suitable weather resistant unistrut can be fixed horizontally to the bolts. The collector frame is then bolted to the unistrut.

Only corrosion resistant (e.g. stainless steel), and shake-proof, nuts and bolts should be used to secure the collector to the fixings.

Dimensions of the Collector

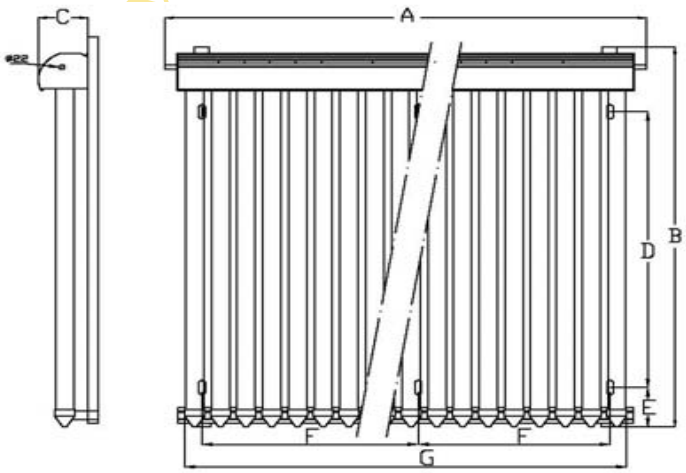

A	**1750 mm**
B	**2000 mm**
C	**150 mm**
D	**1623 mm**
E	**115 mm**
F	**1440 mm**
G	**1600 mm**

Mounting the Collector on a Flat Roof

This may be achieved using the flat roof stand that may be purchased as an extra. Full assembly instructions for the stand are included in the pack.

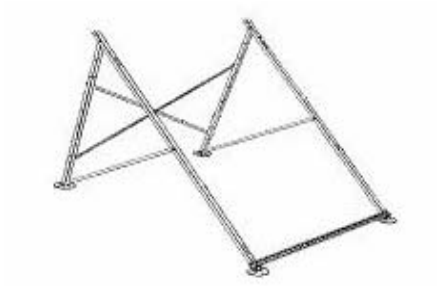

Plumbing in the Solar Circuit

Pipework

The pipework for the solar loop can be copper or stainless steel, but should never be plastic. For domestic installations the pipe runs should be kept as short as is feasible, for example less than 5m each way.
For single collectors, and arrays of up to 6 x 20 tube panels in series, 15mm diameter pipes are preferred. For larger arrays, of up to 20m^2 or more, expansion compensators must be fitted between collectors connected in series, and 22mm diameter pipes should be used.

Hydraulic connections to the manifold should either be screw fittings or compression fittings (+ pipe sealant). They must not, under any circumstances, be brazed or soldered joints. If soldered joints are used anywhere else in the circuit, then only unleaded solder should be used.

For penetration of a tile or slate roof a diamond tipped core bit (hole saw) is preferred. For example, for 15mm pipes a 17mm hole can be cut. It can be sealed around with silicone sealant. (Alternatively a roof flashing kit with a lead tile and central silicone rubber disc can be used.)

It is advisable to drill a separate hole, of ≈ 5mm in diameter, for the temperature sensor leads.
All pipework should be insulated to at least 19mm thickness in cold spaces, and 13 mm in internal heated spaces. High temperature insulation (e.g. Armaflex) must be used on the flow pipe from the collector since the temperature can reach more than 120°C. In some circumstances lower temperature insulation (e.g. Climaflex, m.p. 105° C) may be used on parts of the return pipe from the tank.

Essential Components of the Solar Circuit

For a closed loop (pressurised) circuit:
a) An <u>Automatic Pressure Relief Valve</u> is required. It will release high temperature fluid if the circuit overheats and it must be connected with the vent facing down into a suitable drain. For a normal working pressure of 3 bar, it should be set to vent at a higher pressure (e.g. 4 bar) up to a maximum of 6 bar.

b) A solar rated <u>Air Vent</u> must be installed at the highest point in the circuit, preferably at a pipe turn (e.g. at the collector outflow). <u>Automatic Air Vents,</u> such as those produced by Caleffi Solar, are rated at up to 150°C and they are normally isolated after commissioning the system.

c) An appropriately sized Expansion Vessel (6-12 litres for a domestic system) is connected to the return line and is pre-charged to a little less than the normal working pressure (e.g. 2.5 bar for a 3 bar system). A Pressure Gauge will also be fitted to the return line.

d) If you connect the pressurised solar circuit to the mains water supply for any reason, local regulations may require the use of a Filling-Loop that includes a double check valve to prevent contamination of the supply.

e) A Twin Coil Solar Hot Water Tank is required if you are also using a boiler to heat water. The lower coil is for the solar circuit. This has ≈30% larger volume than a standard tank and twice the thickness of insulation.

For all systems:
f) A suitable Solar Rated Pump (mains powered or low voltage D.C.) with isolation valves must be connected into the return line from the bottom of the solar heat exchange coil. If a standard domestic central heating pump is used it should be set to the lowest speed.

g) An electronic Solar Controller, or its equivalent, to switch on the pump when the temperature difference between the collector manifold and the tank exceeds a minimum value. It should incorporate a Freeze Protection Mode that circulates fluid through the collector when the temperature is close to freezing.
Optimised systems may require a Heat Dump Facility also. This enables excess heat energy to be removed from the system during periods of low water use.

h) A non–return valve should be connected into the return line after the other equipment but before the collector. This is to prevent thermo-siphoning from the tank to the collector at night.

i) With optimised solar systems the temperature of the water in the tank in the summer may reach 65 ° C. Thus, a high flow rate Thermostatic Mixing Valve should be fitted to the hot water supply from the tank.

j) Directly connected systems in areas of hard water should include an Electromagnetic or Chemical Limescale Inhibitor fitted in the cold feed to the hot water tank.

System schematics for a simple "direct" connection and a closed loop pressurised system, may be downloaded from the web-site.

Electrical Connections

Connect in the controller in a safe and easily accessible location. The sensor leads may be extended, if required, using twin core mains cable. The collector sensor must be at the flow output end of the manifold. Use heat transfer paste on the sensor and insert it fully into the sleeve. You may seal the outer end with a small amount of high temperature silicone sealant. The high voltage protection device can be in any convenient place between the sensor and the controller.
The tank sensor(s) must also make good contact with the (copper) tank and be covered by the tank insulation.
The pump power cable should be connected to the appropriate relay output of the controller. A mains fuse rated at no more than 3 Amp is required.
Alternatively you may use a low voltage supply for the controller and pump (12V) using a battery and a solar charging system.

Commissioning the System

For a pressurised circuit:

1) **Charge the system to the working pressure with compressed air or mains water and check for leaks.**
2) **Flush out the system with water to remove debris. If there are any soldered joints, then flush it again with water and a cleaning product, (e.g. Fernox) to remove any flux residues.**
3) **Fill the system only with a solar grade antifreeze solution. This would be a mixture of water and propylene glycol with corrosion and limescale inhibitors added (e.g. Tyfocor L or Fernox). The antifreeze can be supplied pre-mixed or as a concentrate, in which case a 40 % by volume dilution with water is adequate for the UK climate.**
4) **Fill the system slowly with pre-mixed antifreeze using a pressure filling pump, ensuring that any automatic air vent is open. Run the pump and after 24 hours, when further air has been expelled, re-pressurise the system to the correct level.**

For a directly connected circuit with a vented tank:
Turn on the cold feed to the hot water tank, and when the tank has filled use the controller override to operate the pump until it runs quietly. Air will be expelled naturally from the system via the tank vent pipe.

Inserting the Vacuum Tubes

1) **Unpack the tubes one at a time and prepare them at ground level prior to insertion. First check that each tube is undamaged. The tip of each tube should be a silver colour. If one has changed to white then the seal is damaged and the vacuum has been lost. In this unlikely situation the glass tube (but not the internal parts) will need to be replaced.**
2) **Apply a thin layer of heat transfer paste to the heat pipe condenser. Moisten the manifold end of the outer glass tube with soapy water and slide it through the silicone rubber sealing ring into the manifold.**
3) **Insert the tube fully into the manifold, using a twisting movement only. Secure the lower end of the tube with the nylon tube cup provided.**
4) **Repeat the process for the remaining tubes. The screw in tube cups may be locked in place afterwards with a small dab of a suitable adhesive (e.g. silicone sealant).**

Maintenance Requirements

The collector requires very little maintenance and, provided it has been competently installed, it should give you many years of trouble free service.

<u>Once a year</u>, the whole system should be inspected visually for any damage, signs of leakage, or contamination. If it is convenient, the integrity of the vacuum in the tubes may also be checked; as in 1) above.

<u>Once every two years</u>, the heat transfer fluid should be checked for pH (≈ 7.5) and freeze protection function, (using an antifreeze tester).

<u>Once every ten years</u>, it is advisable to fit replacement heat pipes (obtainable from Solar Collect).

Warranty

Solar Collect Limited guarantees: that that this product is without manufacturing defects with regard to materials or workmanship, that it has been tested and found to be sound, and that it conforms to all the relevant norms.

General Conditions of the Warranty:

-The warranty relates to manufacturing defects only.
-The period of the warranty is 5 years from the date on the product purchase invoice.
-Solar Collect Limited reserves the right to examine the product(s) under complaint.
- Arrangements for, and the place of repair of, a product under warranty are at the discretion of Solar Collect.
-Valid claims under the warranty will be remedied by repair or exchange at the expense of Solar Collect within 30 days from the receipt of the claim.
-This warranty only becomes valid when all receivables have been paid in full for the product, a warranty form has been filled out, and a confirmed certificate of warranty can be demonstrated by the purchaser.
-The warranty form must be completed and returned to Solar Collect Limited within a period of 30 days from the date on the purchase invoice.
-The claimant must bear all costs associated with any claim under the warranty that is found to be unjustified.

Warranty Expiry

Entitlement to all of the provisions of the warranty expires under the following circumstances:
-If the product assembly, placement, connection or operation does not conform to the installation manual and professional best practice.
-If the installation of the product is not in compliance with all the relevant norms, safety requirements, and local laws and regulations.
-If changes have been made to the product by the purchaser, or any other person or organization.
-If the product is damaged by handling, transportation or storage that is at variance with the instructions given in the installer instruction manual, or the norms of best professional practice.
-If the product has been used for any purpose other than that for which it was originally intended.
-If the product has been installed by persons not suitably qualified or accredited by any professional organisation.
Under all circumstances entitlement of the purchaser to a make a claim under the warranty expires when the warranty period has lapsed.

Exclusions

This warranty excludes all costs incurred by the purchaser in connection with a claim that is subsequently judged to be invalid.
This warranty excludes all claims arising from the transport or shipping of the product.

Restrictions to the Warranty (Solar Collectors)

The following circumstances are excluded from this warranty:

-Damage to any part of the collector during installation or following incorrect mounting or incorrect assembly of a base or frame upon which the collector is mounted.
-Damage to any part of the collector caused by a malfunction of the solar circuit following the incorrect, unskilled or inappropriate use of any associated equipment or materials.
-Damage to any part of the collector caused by moving it from the location of original installation.
-Damage to any part of the collector caused by lightning, earthquake, meteor strike, or any other environmental catastrophe or Act of God or Gods (e.g. Roman, Greek, Norse or any other).
-Damage to buildings or other property caused by the leaking of heat transfer fluid from any connection or any part of the solar circuit.
- Damage to any part of the collector caused by welding, brazing or soldering on the solar equipment.
- Damage to any part of the collector caused by metal fatigue due to periodical mechanical strain of the hydraulic connections or any other part.
- Damage to any part of the collector or solar circuit caused by freezing of the heat transfer fluid.
- Damage to any part of the collector caused by environmental forces such as wind, snow, ice, or falling objects (e.g. if it is raining cats and dogs).
- Damage to any part of the collector caused by its placement in aggressive surroundings (e.g. exposure to corrosive gases).
- Damage to any part of the collector caused by electrolytic corrosion due to the use of inappropriate components in the solar circuit, or the effect of electrical leakage currents.
- Damage to any part of the collector caused by war, revolution, terrorism, criminality, or civil unrest.
-Loss of vacuum in the glass tubes or the heat pipes caused by excessive mechanical or thermal strain.
-Loss of efficiency of the collector caused by the build up of limescale in any part of the solar circuit.
-Loss of efficiency of the heat pipes caused by ageing.

Making a Claim under the Warranty

Defects must be reported in writing to Solar Collect Limited.
The report must include details of the defect and dated photographic evidence where this is appropriate. It must also include the place and date of purchase, the product serial number and the identification number of the Certificate of Warranty.
Products under claim must be stored at the purchaser's address for a period of not less than 90 days from the date of the claim and be available for inspection by Solar Collect or one of its representatives.

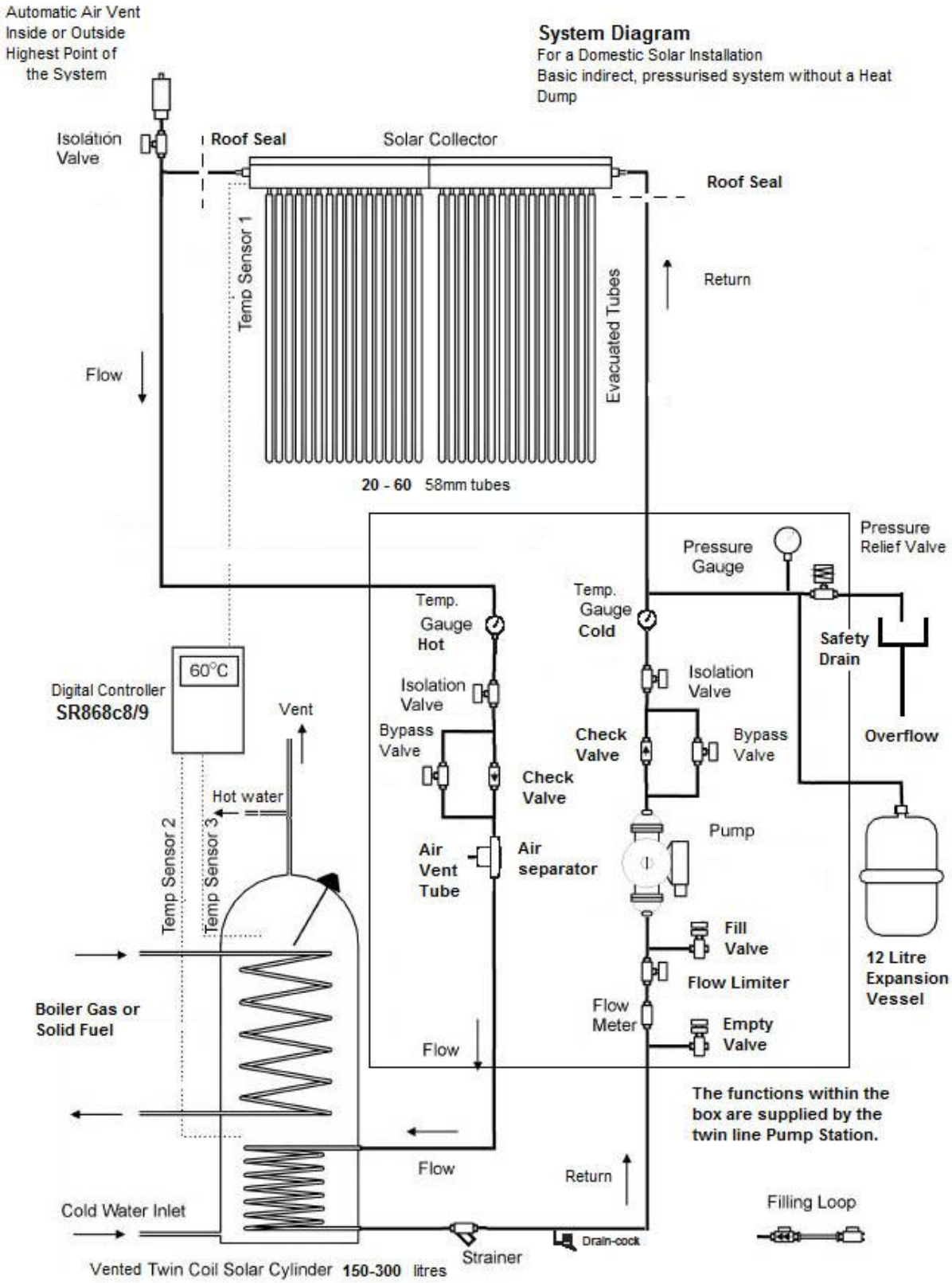
System Diagram
For a Domestic Solar Installation
Basic indirect, pressurised system without a Heat Dump
Automatic Air Vent Inside or Outside Highest Point of the System
Isolation Valve
Roof Seal
Solar Collector
Roof Seal
Temp Sensor 1
Evacuated Tubes
Return
Flow
20 - 60 58mm tubes
Pressure Gauge
Pressure Relief Valve
Temp. Gauge Hot
Temp. Gauge Cold
Safety Drain
Isolation Valve
Isolation Valve
Digital Controller
SR868c8/9
60°C
Vent
Bypass Valve
Check Valve
Bypass Valve
Overflow
Check Valve
Hot water
Pump
Temp Sensor 2
Temp Sensor 3
Air Vent Tube
Air separator
Fill Valve
12 Litre Expansion Vessel
Flow Limiter
Boiler Gas or Solid Fuel
Flow Meter
Empty Valve
Flow
The functions within the box are supplied by the twin line Pump Station.
Flow
Return
Filling Loop
Cold Water Inlet
Drain-cock
Strainer
Vented Twin Coil Solar Cylinder 150-300 litres

Notes on Solar Hot Water System Components

(Indirect, Pressurised System without a Heat Dump)

Solar Collector (Solar Keymarked for MCS approval)
This consists of evacuated tubes with a horizontal header (manifold) at the top.
With heat pipe types, the tubes should be inclined at 30 – 60 ° to the horizontal and face ESE to WSW. (Due south at 40 ° is best.) Vertical tubes on a south facing wall will work, but with only 50 % output.

Solar Cylinder (It will almost certainly already have MCS approval.)
This is usually twin coil with thicker insulation (50 mm) and so it retains heat longer.
It has a volume to match maximum heat from the collector in one sunny summer day.
Rule of thumb:
20 tubes → 150 – 210 l
40 tubes → 210 - 250 l
60 tubes → 250 – 300 l

Digital Controller
This switches on the pump when T1 – T2 exceeds pre-set amount (default 8 ℃).
It switches off the pump when T1 – T2 ≤ 4 ℃.
It also contains several other control functions and protective functions to prevent freezing or overheating.

Automatic Air Vent
It is only used when commissioning or maintaining the system.
This releases trapped air but not liquid. It must be mounted in a pipe turn and vertical at the highest point (inside or outside roof). (Inside is usually more convenient.)
Fitted with an isolation valve that is normally closed.

Air Separator
Continually separates out dissolved air which is periodically vented through a small valve.

Pressure Relief Valve
This is a mandatory safety requirement.
It is usually set for 6 bar maximum and it can also be operated manually.
Useful also as a manual air vent when filling.
For MCS approval a suitable safe drain-away for very hot liquid must be provided.

Filling Loop
If flushing with the mains, Water Supply Regulations require the use of a filling loop, with double check and isolation valves, to prevent any possibility of contaminating the supply.
They are widely available and inexpensive.

Fill Valve
This is used when commissioning, to flush the system and subsequently fill with Heat Transfer Fluid (Solar Antifreeze). A pressure pump such as a garden pressure spray can be attached to pressurise the system.

Empty Valve
This is used open when filling or flushing the system.
All valves are of the modern “ball” type, usually lever operated.

Flow Meter
This indicates the flow rate, which is set to a suitable level that depends on the number of tubes in the collector.

Flow Limiter
This contains a screwdriver operated ball valve to set the correct working flow rate. It is usually initially closed when filling the system. (To direct the fluid up and through the manifold). Then used fully open to pressurise the system and subsequently circulate the fluid to allow air to be driven out.
Rule of thumb: 20 tubes → 2 - 3 l/min, 40 tubes → 4 – 6 l/min, 60 tubes → 6 -12 l/min.

Check Valves (Non-return Valves)
These are essential to prevent reverse circulation by convection when the pump is off.
By-pass Valves
These are used when flushing, or filling and pressurising the system.
Isolation Valves
Are used to separate the collector from the rest of the system for maintenance or repair.

All of the above 3 types of valves are contained within the multifunction ball valves that are integrated into the Thermometer housings in the Flow and Return lines.

Circulating Pump
This is switched on and off by the Digital Controller.
Supplied with the Twin line Pump station is a Grundfos Solar, Low Energy Pump as required for MCS approval**.**
This has three speed settings, of which only the lowest is normally required for most domestic installations.

Pressure Gauge
The minimum pressure is usually calculated as 0.5 bar + 0.5 bar for each 5m rise to the collectors, i.e. about 1 bar. An operating pressure of 1-2 bar is normally set when filling cold with heat transfer fluid. This will rise slightly when hot.
Rapid fluctuations in pressure indicate air in the system.

Expansion Vessel
This helps to maintain a constant pressure as the fluid expands. It contains a bladder that expands against a pressurised gas volume. It is pre-charged to 2.5 bar and thus the pressure can rise to this level before the regulating effect starts.
It is connected to the Pump Station via a length of uninsulated flexible stainless steel tubing through a special adaptor containing a separating double check valve.
Thus the vessel can be replaced without having to depressurise the circuit.

Line Strainer
This is important to preserve the life of the pump as it captures circulating debris in the solar circuit. It is best at the coolest point where the return exits the cylinder. It may double as a drain, but it is useful to fit a drain cock also.

Heat transfer Fluid
This contains special solar antifreeze and a corrosion inhibitor. It can be used up to 50% concentration but 25 -30 % is often ok in the UK. (Dilute only with deionised water.)
The controller also has a frost protection function which circulates the fluid below 4 ℃.

Pipework
For up to 5 Collectors in series (100 tubes) should be 15 mm Cu or DN16 Flexible Stainless Steel. Use 19 mm high temperature insulation in cold spaces.

Roof Seals
For pipes and sensor cable, effective seals are required for MCS approval.
Solardek™ lead and silicone rubber roof flashings are provided with the kit.

20 Tube Kit—Components List

Tec Solar 20 x 58 mm Collector with Solar Keymark*

Stainless Steel Roof fixing straps for slate or flat tile.*

Solarbayer ST6m twin line Pump Station with Grundfos low Energy pump*

Bracket with Quick Connect/ Disconnect Kit and 12 l Varem Expansion Vessel*

Pipework and Fittings, including Caleffi Aluminium Tundish, for safety drain assembly*

Automatic Air Vent, isolating Ball valve and T Connector with integral mesh filter*

Solardek coated Lead/Silicone Roof Flashings for ST pipes and Temp. sensor cable*

2 x 1.5 m 19 mm Insulated* stainless DN16 flexible piping with all fittings for easy through roof connection.

2 x 2m 19 mm Insulated* DN16 flexible piping + all fittings for easy connection from pump station to Cylinder.

High temperature Y—strainer and fittings to connect at the cylinder outlet return line for drainage and pump protection*

SR868 C8/9 Digital Solar Pump Controller with 3 sensors and multiple built in protection functions, including over heat and freeze protection.*

*** Items required in the standard for MCS approval.**

40 Tube Kit—Components List

2 x Tec Solar 20 x 58 mm Collector with Solar Keymark*

Flexible Stainless Steel Connector with insulation

Stainless Steel Roof Fixing Straps for a slate roof*

Solarbayer ST6m twin line Pump Station with Grundfos low Energy pump*

Bracket with Quick Connect/ Disconnect Kit and 12 l Varem Expansion Vessel*

Pipework and Fittings, including Caleffi Aluminium Tundish, for safety drain assembly*

Automatic Air Vent, isolating Ball valve and T Connector with integral mesh filter*

Solardek coated Lead/Silicone Roof Flashings for ST pipes and Temp. sensor cable*

2 x 1.5 m 19 mm Insulated* stainless DN16 flexible piping with all fittings for easy through roof connection.

2 x 2m 19 mm Insulated* DN16 flexible piping + all fittings for easy connection from pump station to Cylinder.

High temperature Y—strainer and fittings to connect at the cylinder outlet return line for drainage and pump protection*

SR868 C8/9 Digital Solar Pump Controller with 3 sensors and multiple built in protection functions, including over heat and freeze protection.*

*** Items required in the standard for MCS approval.**